AOSIF Perkins Series

Product introduction

Model AP50 Generator set

50KVA/24KW

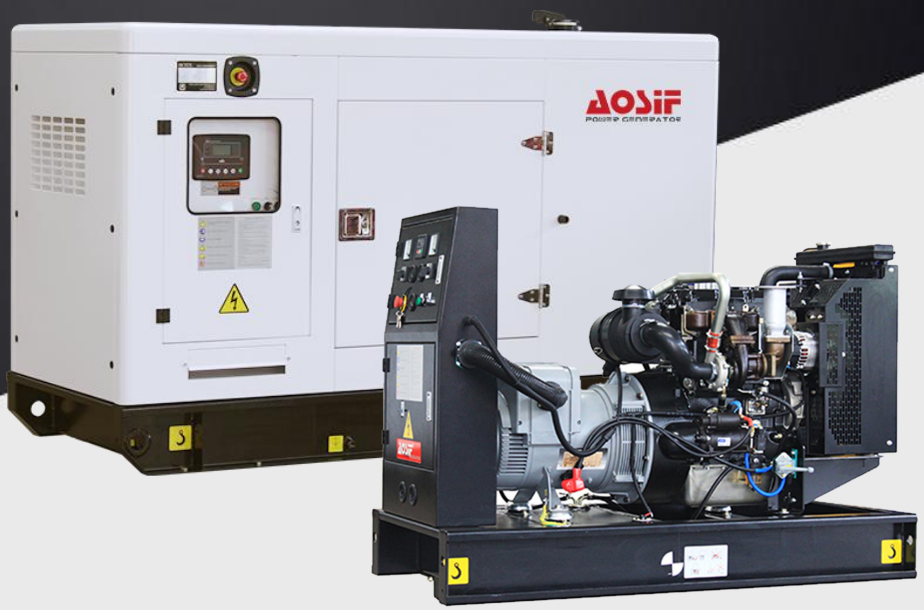

XIAMEN AOSIF ENGINEERING LTD.

General Performance Data

Prime Power	45KVA/36KW
Stand by Power	50KVA/40KW
Frequency/Speed	50Hz/1500rpm
Rated Power Factor(cosφ)	0.8
Standard Voltage	230V/400V
Phases	3

Engine	Brand	Perkins
	Model	1103A-33TG1
Control module	Deepsea 6120	
Rated Current	65A	
Capacity of Breaker	100A	
Starting Voltage	DC12V	

Fuel consumption

Rated output	Fuel consumption rate	
100%Standby	216.1g/KW.h	8.1L/h
100%Prime	211.1g/KW.h	7.2L/h
75%Prime	216g/KW.h	5.61L/h
50%Prime	235.4g/KW.h	4.06L/h
25%Prime	309g/KW.h	2.65L/h

Standards followed

ISO9001	ISO14001
ISO8528	ISO12100
ISO13849	EN12601
GB12786	GB/T2820
IEC60034	IEC60204
CE	RETIE

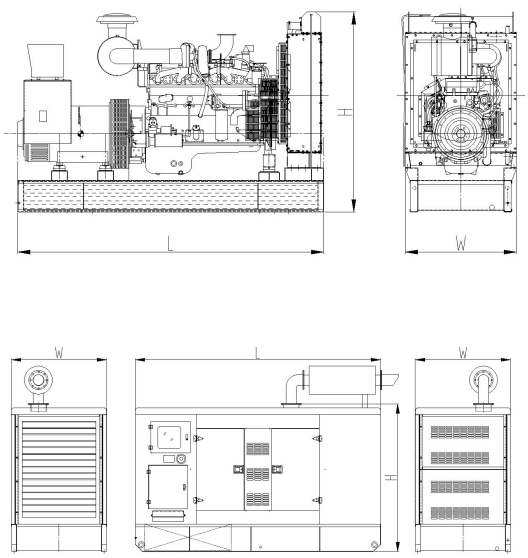

Dimensions and Weights

Type	Open	Silent
Length(mm)	1770	2250
Width(mm)	730	1000
Height(mm)	1280	1540
Weight(kg)	880	1280
Base fuel tank volume (L)	90	90

Engine specification

Basic parameter	
Manufacturer	Perkins
Model	1103A-33TG1
No. of cylinder	3
Type	4 cycle, Vertical In-line
Prime Power	42.2kw /57.4HP
Standby Power	46.5kw /63.2HP
Induction system	Naturally aspirated
Governor	Mechanical/electronic
Bore x Stroke	105x127mm
Displacement	3.3L
Compression ratio	17.25:1
Oil Capacity(Total)	8.3L
Coolant Capacity(Engine only)	10.2L
Cranking Motor Voltage	DC12V

Fuel System	
Type Injection system	Indirect injection
Min. Allowable flow of fuel to fuel pump	8.1 L/h

Lubrication system	
Oil Pressure	
---Idle speed	414kPa
---Rated speed	Min 276kPa
Max. allowable oil temperature	125℃
Oil Pan capacity - Low/High	6.2L/7.8L
Total system capacity	8.3L
Angularity of oil pan-Front Down	25°

Air induction system	
Maximum allowable intake air restriction	
---with clean filter element	5.0kPa
---with dirty filter element	8.0kPa
---air filter type	Dry element type

Exhaust system	
Max. allowable back pressure	10.0kPa
Standard exhaust pipe diameter	56mm

Cooling system	
Coolant capacity	
---Engine only	4.4L
---Total system	10.2L
---With heat exchanger	-
Standard thermostat(modulating) range	82-93 ℃
Max. coolant temerature	110 ℃
Max. allowable top tank temerature for stand by/prime power	110 ℃

Electric system	
Min. recommended battery capacity (12V)	
---10℃(50°F) & above- 0°F CCA	660A
--- 0℃(32°F) to 10℃(50°F)- 0°F CCA	660A
---18℃(0°F) to 0℃(32°F)- 0°F CCA	660A
Max. allowable resistance of Starting circuit	0.002ohm
Starter(heave,Anode)	DC12V
Battery recharge system, negative ground	65ampere

Alternator specification

Phases	3
Poles	4
Power factor(cosφ)	0.8
Winding connection	Star
Winding pitch	2/3
Voltage regulator type	AVR

Coating	Vacuum impregnation
Insulation class	H
Protection	IP23
Excitation system	Self-excited
Bearing	Single Bearing
Coupling	Flexible disc

Control system Introduction

Deepsea 6120 Auto start & auto mains failure control panel

Deepsea 6120 is an auto mains failure controller for single generator, it can monitor and protect the generator working all the time. it has a LCD display which clearly shows the status of the engine. this controller include seven inputs and six outputs. This controller can also be programmed using the front panel or by using DSE configuration Suite PC software

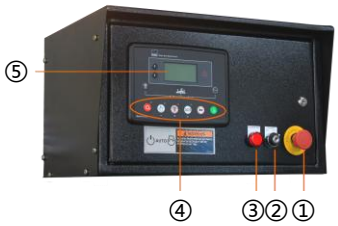

①Emergency stop button
②Power switch
③Power indicator
④Operation buttons
⑤LCD display

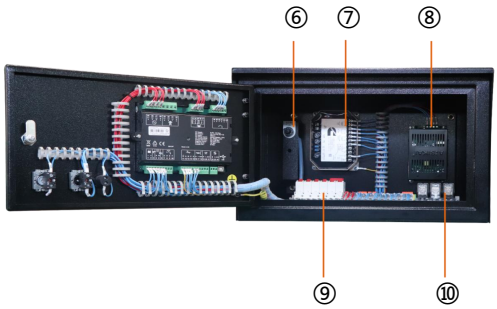

⑥Voltage and frequency trimmer
⑦Governor
⑧Charger
⑨MCB
⑩Relay

Key Features:

- Auto start/stop, load transfer and alarming of generator
- Remote start on or off load
- With hierarchical loading function
- Multiple start/stop cycles can be preset
- 3 phase generator and mains voltage monitoring.
- Generator/load power detection(kW, kVA, kVAr PF)
- Overload protection (kW)
- Load current monitoring and protection
- Engine speed protection
- Engine pre-heat
- Engine start idle & stop idle
- Battery voltage monitoring
- Start under the low battery
- 4 active outputs
- 4 digital inputs and 3 analogue inputs.
- 6 Custom digital input
- 6 outputs(4 configurable on magnetic pick-up, 6 configurable on Canbus version)
- DSE2130,DSE2157,DSE2548 expansion module can be connected
- Support 0-10V or 4-20mA oil pressure sensor

Main features:

- Multi language display
- Mains failure self starting
- The running time of the engine can be recorded to facilitate the maintenance and repair of the unit
- User-friendly set-up and button layout
- LCD display can display multiple parameters at the same time
- Support EFI engine
- IP65 rating (with optional gasket)
- PC and front panel configuration
- 100 event records
- Data recording and trend analysis

Protection:

- Two sets of protection parameters can be preset
- Normal alarm, electrical trip and shutdown alarm can be set to effectively monitor the engine speed,oil pressure, water temperature and oil level, as well as the frequency, voltage, current and power of the alternator, for complete engine/alternator protection
- Low Oil Pressure
- High water Temperature
- High voltage and low voltage
- Overspeed
- Emergency stop
- Fail to start

AOSIF Soundproof Canopy Introduction:

Standard Type:

- The arc angle structure makes the appearance beautiful and not easy to bump
- The sufficient air in & out design ensure long-term and stable operation of the unit
- High quality coating powder, chemical surface treatment & 100-120um coating thickness greatly improving the anti-corrosion and anti rust level
- Isolation net is designed for air inlet, exhaust outlet and muffler outlet to prevent objects from entering the unit
- Stainless steel hinge & door lock are beautiful and anti-rust
- High density foam used inside effectively reduces noise
- 2.0mm cold rolled plate used makes the body more solid
- Ceiling Lighting is equipped for easy operation
- The bottom forklift and loading port design enables easy loading and unloading
- The built-in base fuel tank with fuel filler set on the shell facilitates refueling
- The drainage outlets are all connected to the outside for easy operation
- Models above medium power range are designed with top hoisting mechanism to facilitate transportation of the unit.

Imitated container type:

- The shell is made of 3.0mm hot rolled steel plate so as to withstand the lifting capacity of 15-ton without deformation
- The shell base is independent from the unit with 3mm thick checkered steel plate floor, which is beautiful & antiskid, and is convenient for overhaul & maintenance of the unit
- The switch cabinet and control panel are respectively set on both sides of the shell for easy maintenance & operation
- The door handle, lock and hinge are all made of stainless steel to avoid rusting
- The shell looks similar to standard container, and can be loaded into 40HQ container for transportation, which is convenient for shipping
- The air out louver made of the mesh plate with podwer coating and pasted with high-density glass fiber is beautiful and not easy to rust, and can further reduce the noise
- The lifting eye holes are designed on the top same as the standard container for easy handling
- Isolation net is designed for air inlet, exhaust outlet and muffler outlet to prevent objects from entering the unit
- High density foam used inside effectively reduces noise
- The sufficient air in & out design ensure long-term and stable operation of the unit
- The built-in base fuel tank with fuel filler set on the shell facilitates refueling
- The drainage outlets are all connected to the outside for easy operation
- Double emergency stop button set on different surfaces enables quick response to operation requirements
- Ceiling Lighting is equipped for easy operation

Standard container type:

- Can be shipped on board directly during transportation
- The switch cabinet and control panel are respectively set on both sides of the shell for easy maintenance & operation
- The mesh plate with podwer coating and inner pasted with high-density glass fiber is installed inside the shell, which is beautiful and anti-rust, and can further reduce the noise
- The air in & out louver made of the mesh plate with podwer coating and pasted with high-density glass fiber is beautiful and not easy to rust, and can further reduce the noise
- 3mm thick checkered steel plate floor is beautiful & antiskid, and is convenient for overhaul & maintenance of the unit
- Isolation net is designed for air inlet, exhaust outlet and muffler outlet to prevent objects from entering the unit
- Double emergency stop button set on different surfaces enables quick response to operation requirements
- The sufficient air in & out design ensure long-term and stable operation of the unit
- The independent daily fuel tank can be designed to put inside to meet requirements of continuous operation
- The drainage outlets are all connected to the outside for easy operation
- The fuel filler is set on the shell to facilitate refueling
- Ceiling Lighting is equipped for easy operation

Decomposition diagram introduction of AOSIF Typical Canopy

Standard supply scope:

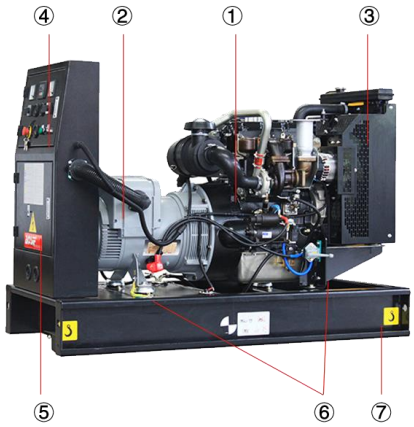

① Engine
② AC Alternator
③ Cooling Radiator
④ Auto Start Control Panel
⑤ Main Ciruit Breaker
⑥ Built in Shock Pad
⑦ High Strength Frame
⑧ Exhaust silencer
⑨ Bellow
⑩ Starting battery

Optional supply scope:

Genset	Engine	Alternator	Control system
• Tool box • Base fuel tank • External daily fuel tank • Trailer	• Fuel heater • Fuel and water separator	• Temp. detector for winding and bearing • PMG • Antirust, mildew and salt fog treatment • Anti condensation heater	• ATS • Synchronization System • Adjustable earth relay
Breaker	**Fuel system**	**Lub-oil system**	**Cooling system**
• ABB • Schneider	• Low fuel level alarm • Auto Fuel Pump • T Vlave	• Lub oil heater • Temp.-sensor • Oil drain Pump	• Elec.coolant Heater

Our Promises

- AOSIF Engineering provides a full line of brand new and high quality products.
- Each unit passes strictly loading test in factory before shipment.
- Quality Warranty is provided strictly in accordance with warranty terms.
- Three level service guarantee: Aosif dealers, Service outlets of engine/alternator manufacturers, Aosif service team.

XIAMEN AOSIF ENGINEERING LTD.

Marketing Center: Unit 1001,No.1 of Cheng Yi North Street,Software Park Phase III ,Xiamen ,China;

Factory: No.1088 Tangbian, Changtai Economic Development Zone, Zhangzhou,Fujian,China.

Website: www.aosif.com

You may get more information from our official account.

Specifications are subject to change without notice.