# AOSIF Perkins Series

## Product introduction

# Model AP1375 Generator set

# 1250KVA/1000KW

XIAMEN AOSIF ENGINEERING LTD.

## General Performance Data

| | | | | |
|---|---|---|---|---|
| Prime Power | 1250KVA/1000KW | Engine | Brand | Perkins |
| Stand by Power | 1375KVA/1100KW | | Model | 4012-46TAG0A |
| Frequency/Speed | 50Hz/1500rpm | Control module | Deepsea 6120 | |
| Rated Power Factor(cosφ) | 0.8 | Rated Current | 1804A | |
| Standard Voltage | 230V/400V | Capacity of Breaker | 2000A | |
| Phases | 3 | Starting Voltage | DC24V | |

## Fuel consumption

| Rated output | Fuel consumption rate | |
|---|---|---|
| 100%Standby | 196g/KW.h | 278L/h |
| 100%Prime | 197g/KW.h | 255L/h |
| 75%Prime | 201g/KW.h | 195L/h |
| 50%Prime | 208g/KW.h | 135L/h |
| 25%Prime | - | - |

## Standards followed

| | |
|---|---|
| ISO9001 | ISO14001 |
| ISO8528 | ISO12100 |
| ISO13849 | EN12601 |
| GB12786 | GB/T2820 |
| IEC60034 | IEC60204 |
| CE | RETIE |

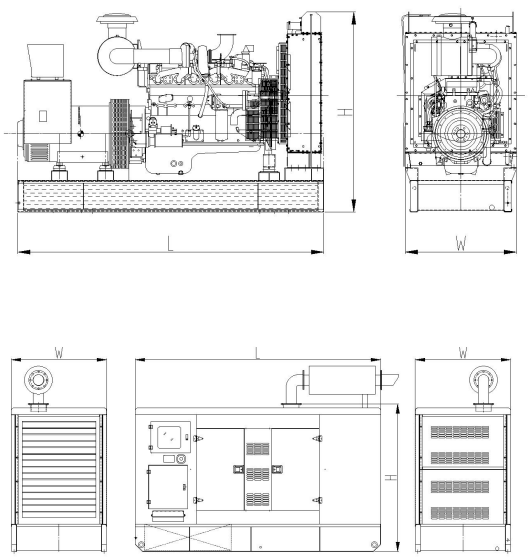


## Dimensions and Weights

| Type | Open | Silent |
|---|---|---|
| Length(mm) | 5125 | 6000 |
| Width(mm) | 2200 | 2430 |
| Height(mm) | 2410 | 2800 |
| Weight(kg) | 9120 | 12250 |
| Base fuel tank volume (L) | 2120 | 2120 |

# Engine specification

| Basic parameter | |
|---|---|
| Manufacturer | Perkins |
| Model | 4012-46TAG0A |
| No. of cylinder | 12 |
| Type | 4 stroke， Vee 60° |
| Prime Power | 1117kw |
| Standby Power | 1222kw |
| Induction system | Turbocharged air to air charge cooled |
| Governor | Digital governing to ISO 8528-5 Class G2, isochronous |
| Bore x Stroke | 160x190mm |
| Displacement | 45.842L |
| Compression ratio | 13:1 |
| Oil Capacity(Total) | 177L |
| Coolant Capacity(Engine only) | 223L |
| Cranking Motor Voltage | DC24V |

| Fuel System | |
|---|---|
| Type Injection system | Direct injection |

| Lubrication system | |
|---|---|
| Max sump capacity (max dipstick) | 157.5 |
| Min sump capacity (min dipstick) | 115 L |
| Max oil temp (continuous) | 105℃ |
| Max oil temp (intermittent) | 110℃ |
| Relief valve opening pressure | 400 kPa |
| Min oil pressure | 340 kPa |
| Oil pressure at max no load speed | 400 kPa |

| Air induction system | |
|---|---|
| Maximum allowable intake air restriction | |
| ---with clean filter element | 2.0kPa |
| ---with dirty filter element | 4.0kPa |
| ---air filter type | Medium duty axial flow |

| Exhaust system | |
|---|---|
| Max. allowable back pressure | 5.0kPa |
| Standard exhaust pipe diameter | 254mm |

| Cooling system | |
|---|---|
| Coolant capacity | |
| ---Engine only | 73L |
| ---Total system | 223L |
| ---With heat exchanger | - |
| Standard thermostat(modulating) range | 71-85 ℃ |
| Water temp switch/alarm setting | 103 ℃ |
| Engine coolant circuit max restriction | 20 kPa |

| Electric system | |
|---|---|
| Alternator output voltage | 24 V |
| Alternator output current | 55 A |
| Starter motor input voltage | 24 V |
| Starter motor power draw | 16.4 kW |
| No. of teeth on flywheel ring gear | 156 |
| No. of teeth on starter pinion | 12 |

# Alternator specification

| | |
|---|---|
| Phases | 3 |
| Poles | 4 |
| Power factor(cosφ) | 0.8 |
| Winding connection | Star |
| Winding pitch | 2/3 |
| Voltage regulator type | AVR |

| | |
|---|---|
| Coating | Vacuum impregnation |
| Insulation class | H |
| Protection | IP23 |
| Excitation system | Self-excited |
| Bearing | Single Bearing |
| Coupling | Flexible disc |

# Control system Introduction

## Deepsea 6120 Auto start & auto mains failure control panel

**Deepsea 6120** is an auto mains failure controller for single generator, it can monitor and protect the generator working all the time. it has a LCD display which clearly shows the status of the engine. this controller include seven inputs and six outputs. This controller can also be programmed using the front panel or by using DSE configuration Suite PC software

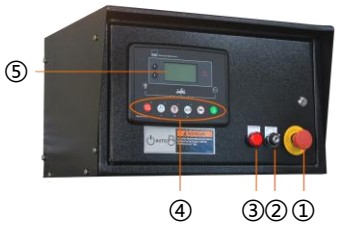


①Emergency stop button
②Power switch
③Power indicator
④Operation buttons
⑤LCD display

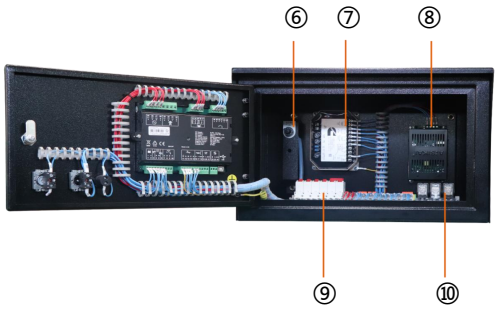


⑥Voltage and frequency trimmer
⑦Governor
⑧Charger
⑨MCB
⑩Relay

## Key Features:

- Auto start/stop, load transfer and alarming of generator
- Remote start on or off load
- With hierarchical loading function
- Multiple start/stop cycles can be preset
- 3 phase generator and mains voltage monitoring.
- Generator/load power detection(kW, kVA, kVAr PF)
- Overload protection (kW)
- Load current monitoring and protection
- Engine speed protection
- Engine pre-heat
- Engine start idle & stop idle
- Battery voltage monitoring
- Start under the low battery
- 4 active outputs
- 4 digital inputs and 3 analogue inputs.
- 6 Custom digital input
- 6 outputs(4 configurable on magnetic pick-up, 6 configurable on Canbus version)
- DSE2130,DSE2157,DSE2548 expansion module can be connected
- Support 0-10V or 4-20mA oil pressure sensor

## Main features:

- Multi language display
- Mains failure self starting
- The running time of the engine can be recorded to facilitate the maintenance and repair of the unit
- User-friendly set-up and button layout
- LCD display can display multiple parameters at the same time
- Support EFI engine
- IP65 rating (with optional gasket)
- PC and front panel configuration
- 100 event records
- Data recording and trend analysis

## Protection:

- Two sets of protection parameters can be preset
- Normal alarm, electrical trip and shutdown alarm can be set to effectively monitor the engine speed,oil pressure, water temperature and oil level, as well as the frequency, voltage, current and power of the alternator, for complete engine/alternator protection
- Low Oil Pressure
- High water Temperature
- High voltage and low voltage
- Overspeed
- Emergency stop
- Fail to start

# AOSIF Soundproof Canopy Introduction:

## Standard Type:

- The arc angle structure makes the appearance beautiful and not easy to bump
- The sufficient air in & out design ensure long-term and stable operation of the unit
- High quality coating powder, chemical surface treatment & 100-120um coating thickness greatly improving the anti-corrosion and anti rust level
- Isolation net is designed for air inlet, exhaust outlet and muffler outlet to prevent objects from entering the unit
- Stainless steel hinge & door lock are beautiful and anti-rust
- High density foam used inside effectively reduces noise
- 2.0mm cold rolled plate used makes the body more solid
- Ceiling Lighting is equipped for easy operation
- The bottom forklift and loading port design enables easy loading and unloading
- The built-in base fuel tank with fuel filler set on the shell facilitates refueling
- The drainage outlets are all connected to the outside for easy operation
- Models above medium power range are designed with top hoisting mechanism to facilitate transportation of the unit.

## Imitated container type:

- The shell is made of 3.0mm hot rolled steel plate so as to withstand the lifting capacity of 15-ton without deformation
- The shell base is independent from the unit with 3mm thick checkered steel plate floor, which is beautiful & antiskid, and is convenient for overhaul & maintenance of the unit
- The switch cabinet and control panel are respectively set on both sides of the shell for easy maintenance & operation
- The door handle, lock and hinge are all made of stainless steel to avoid rusting
- The shell looks similar to standard container, and can be loaded into 40HQ container for transportation, which is convenient for shipping
- The air out louver made of the mesh plate with podwer coating and pasted with high-density glass fiber is beautiful and not easy to rust, and can further reduce the noise
- The lifting eye holes are designed on the top same as the standard container for easy handling
- Isolation net is designed for air inlet, exhaust outlet and muffler outlet to prevent objects from entering the unit
- High density foam used inside effectively reduces noise
- The sufficient air in & out design ensure long-term and stable operation of the unit
- The built-in base fuel tank with fuel filler set on the shell facilitates refueling
- The drainage outlets are all connected to the outside for easy operation
- Double emergency stop button set on different surfaces enables quick response to operation requirements
- Ceiling Lighting is equipped for easy operation

## Standard container type:

- Can be shipped on board directly during transportation
- The switch cabinet and control panel are respectively set on both sides of the shell for easy maintenance & operation
- The mesh plate with podwer coating and inner pasted with high-density glass fiber is installed inside the shell, which is beautiful and anti-rust, and can further reduce the noise
- The air in & out louver made of the mesh plate with podwer coating and pasted with high-density glass fiber is beautiful and not easy to rust, and can further reduce the noise
- 3mm thick checkered steel plate floor is beautiful & antiskid, and is convenient for overhaul & maintenance of the unit
- Isolation net is designed for air inlet, exhaust outlet and muffler outlet to prevent objects from entering the unit
- Double emergency stop button set on different surfaces enables quick response to operation requirements
- The sufficient air in & out design ensure long-term and stable operation of the unit
- The independent daily fuel tank can be designed to put inside to meet requirements of continuous operation
- The drainage outlets are all connected to the outside for easy operation
- The fuel filler is set on the shell to facilitate refueling
- Ceiling Lighting is equipped for easy operation

# Decomposition diagram introduction of AOSIF Typical Canopy

# Standard supply scope:

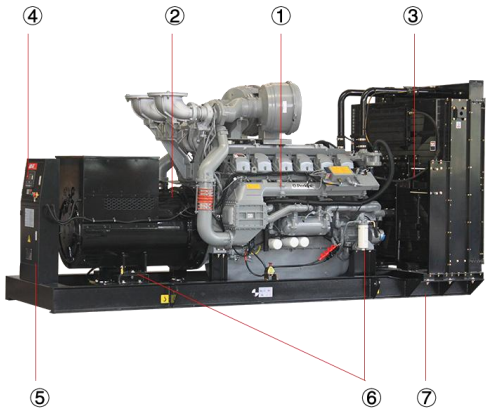


① Engine
② AC Alternator
③ Cooling Radiator
④ Auto Start Control Panel
⑤ Main Ciruit Breaker
⑥ Built in Shock Pad
⑦ High Strength Frame
⑧ Exhaust silencer
⑨ Bellow
⑩ Starting battery

# Optional supply scope:

| Genset | Engine | Alternator | Control system |
|---|---|---|---|
| • Tool box<br>• Base fuel tank<br>• External daily fuel tank<br>• Trailer | • Fuel heater<br>• Fuel and water separator | • Temp. detector for winding and bearing<br>• PMG<br>• Antirust, mildew and salt fog treatment<br>• Anti condensation heater | • ATS<br>• Synchronization System<br>• Adjustable earth relay |
| **Breaker** | **Fuel system** | **Lub-oil system** | **Cooling system** |
| • ABB<br>• Schneider | • Low fuel level alarm<br>• Auto Fuel Pump<br>• T Vlave | • Lub oil heater<br>• Temp.-sensor<br>• Oil drain Pump | • Elec.coolant Heater |

# Our Promises

- AOSIF Engineering provides a full line of brand new and high quality products.
- Each unit passes strictly loading test in factory before shipment.
- Quality Warranty is provided strictly in accordance with warranty terms.
- Three level service guarantee: Aosif dealers, Service outlets of engine/alternator manufacturers, Aosif service team.

XIAMEN AOSIF ENGINEERING LTD.

Marketing Center: Unit 1001,No.1 of Cheng Yi North Street,Software Park Phase III ,Xiamen ,China;

Factory: No.1088 Tangbian, Changtai Economic Development Zone, Zhangzhou,Fujian,China.

Website: www.aosif.com

**You may get more information from our official account.**

**Specifications are subject to change without notice.**